Visio 3-1 - With Frame
1236550
07-11-2019

RAIS attika
ART OF FIRE FEUERKULTUR

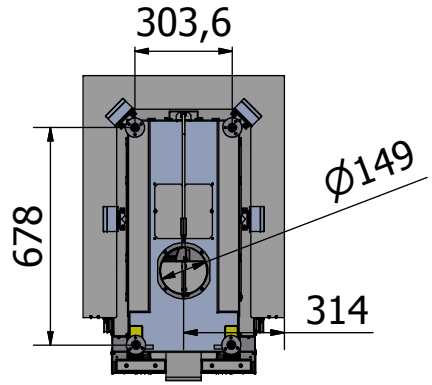

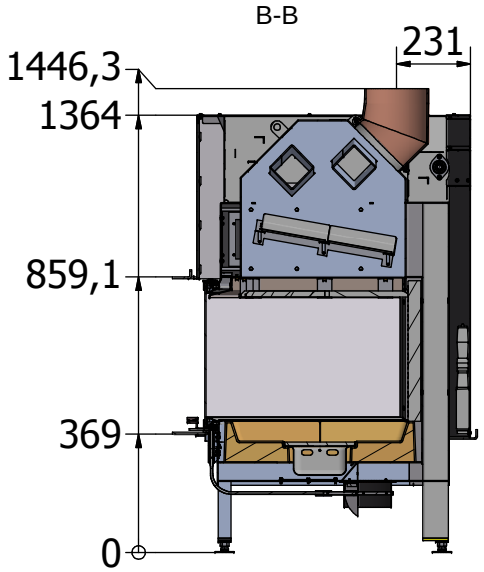

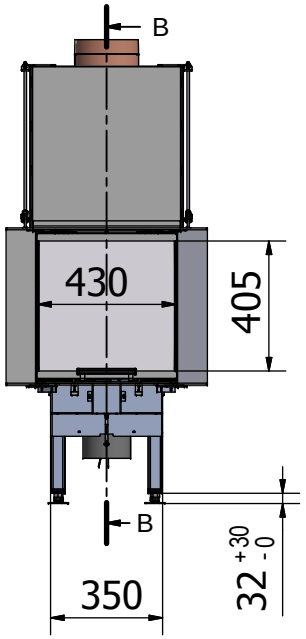

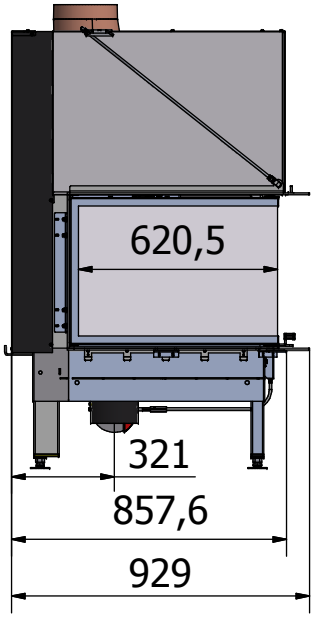

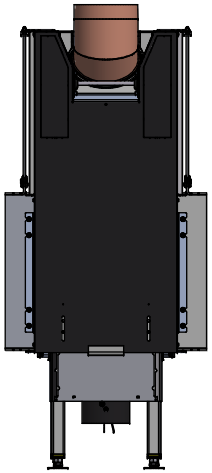

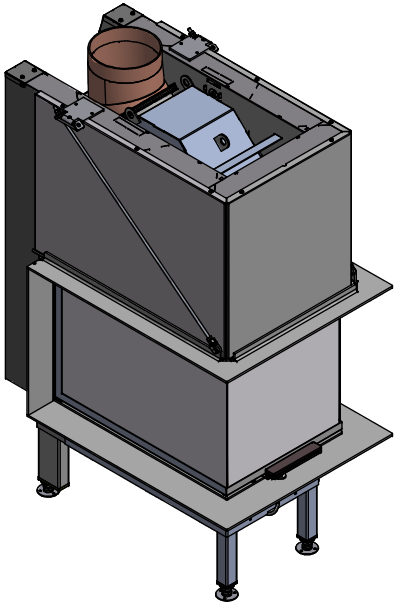

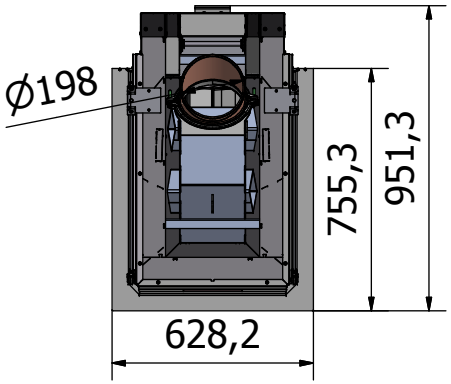

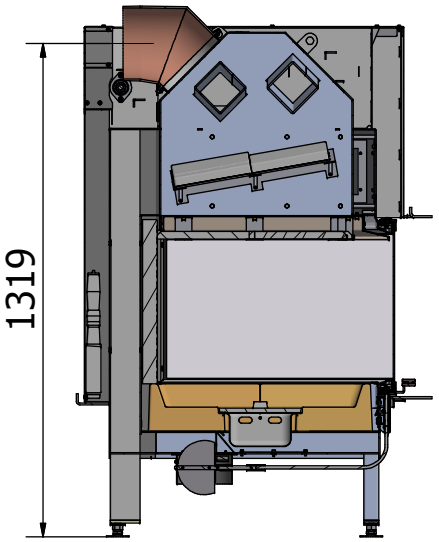

RAIS attika
ART OF FIRE FEUERKULTUR

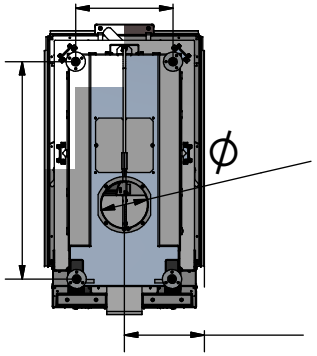
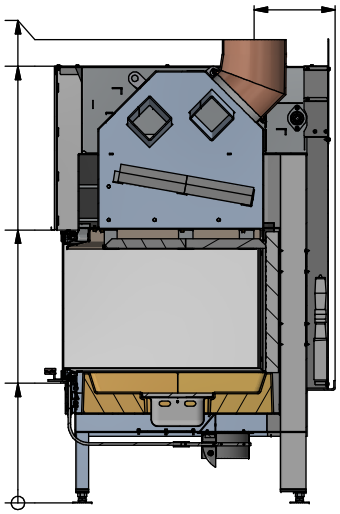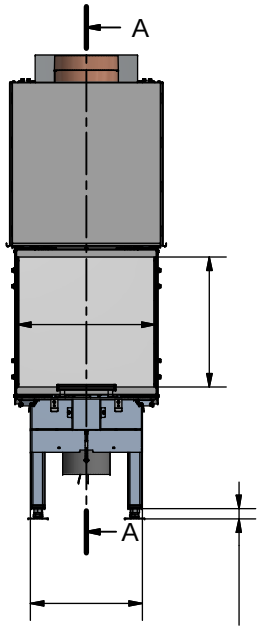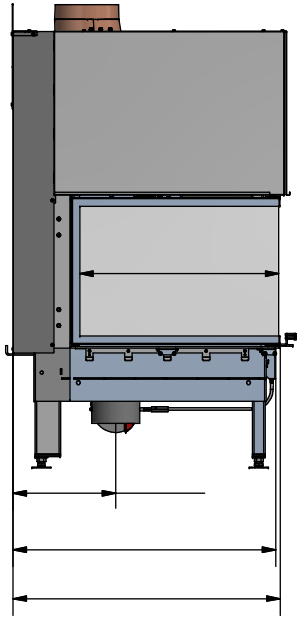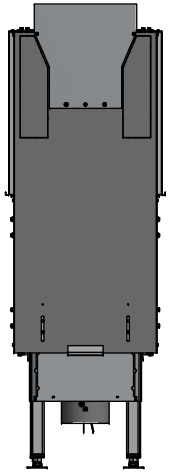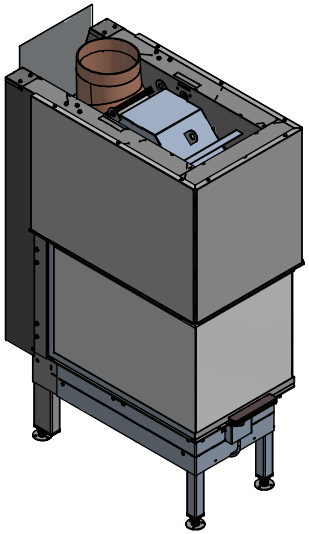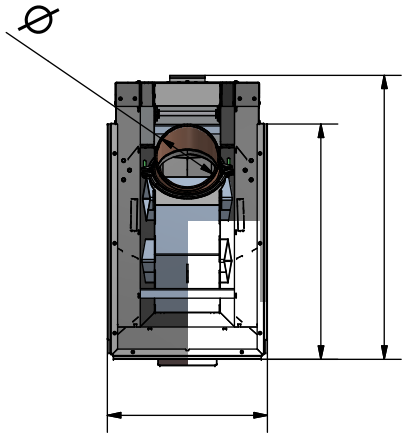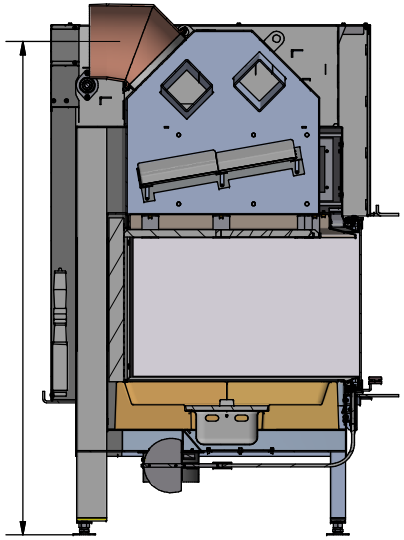
A-A